ASCASO

KAP

ASCASO

ascaso

Ref.	Descripción	Description
I...71	PIPETA ASPIRACION	*90º FITTING*
I..129	RETENEDOR CABLE	*TERMINAL WIRING*
I..130	REGLETA 3 VIAS	*TERMINAL BLOCK*
I..140	CABLE RED EUROPEO	*WIRING 230V*
I..147	CONDENSADOR UL	*CONDENSER*
I..169	MICRO PALANCA	*MICROSWITCH*
I..358	TORNILLO PORTADUCHA M4 INOX	*M4 SCREW*
I..640	TORNILLO RETENEDOR CABLE INOX	*INOX SCREW*
I.1172	TAPON CUERPO DREAM	*DREAM BODY TAP*
I.2516	LATERAL BLANCO KAP	*KAP SIDE PANNEL (WHITE)*
I.2531	CHASIS KAP	*KAP HOUSING*
I.2532	BASE MECANISMOS KAP	*KAP GROUP SUPPORT*
I.2538	BASE SILICONA VALVULA DEPOSITO KAP	*KAP WATER TANK SILICONE HOUSING*
I.2553	TORNILLO PLASTICO D.4,1x12 (KAP)	*(KAP) SCREW D.4,1X12*
I.2554	TORNILLO PLASTICO D.4,1x30 (KAP)	*(KAP) SCREW D.4,1X30*
I.2555	TORNILLO PLASTICO D.4,1X30 (KAP)	*(KAP) SCREW D.4,1X30*
I.2557	PATA ADHESIVA KAP	*KAP ADHESIVE RUBBER FOOT*
I.2560	CONTADOR VOLUMETRICO FHKSC	*DIGMESA FLOWMETER*
I.2561	CABLEADO KAP	*KAP WIRING*
I.2562	CABLEADO KAP TRONIC	*KAP TRONIC WIRING*
I.2563	CABLEADO KAP TRONIC VAPOR	*KAP TRONIC STEAM WIRING*
I.2566	SOPORTE CIRCUITO ELECTRONICO KAP	*KAP POWER PCB FASTENER*
I.2571	LATERAL NEGRO KAP	*KAP SIDE PANNEL (BLACK)*
I.2627	PLETINA SOPORTE MICRO KAP	*MICRO SUPPORT PLATE KAP*
I.2734	CIRCUITO ELECTRONICO KAP 230V	*ELECTRONIC CIRCUIT KAP 230V*
I.2824	TLLO. DIN 7504/N ST-3,5 (L=9,5mm) INOX	*SCREW*
I.2838	TORNILLO M4x5 DIN965 INOX A2	*SCREW M4x5 DIN965 INOX A2*
I.2851	FRONTAL KAP CROMADO	*CHROMED FRONT KAP*
I.3000	TAPA JUNTA DEPOSITO KAP	*ELECTRONIC CIRCUIT KAP 120V*
I.3303	CIRCUITO ELECTRONICO KAP 120V	*ELECTRONIC CIRCUIT KAP 120V*
I.3321	BASE MECANISMOS KAP ARABO	*KAP GROUP SUPPORT ARABO*
MI..55	TORNILLO DIN 7981 3.2 X 9.5 ZN	*SCREW DIN 7981*

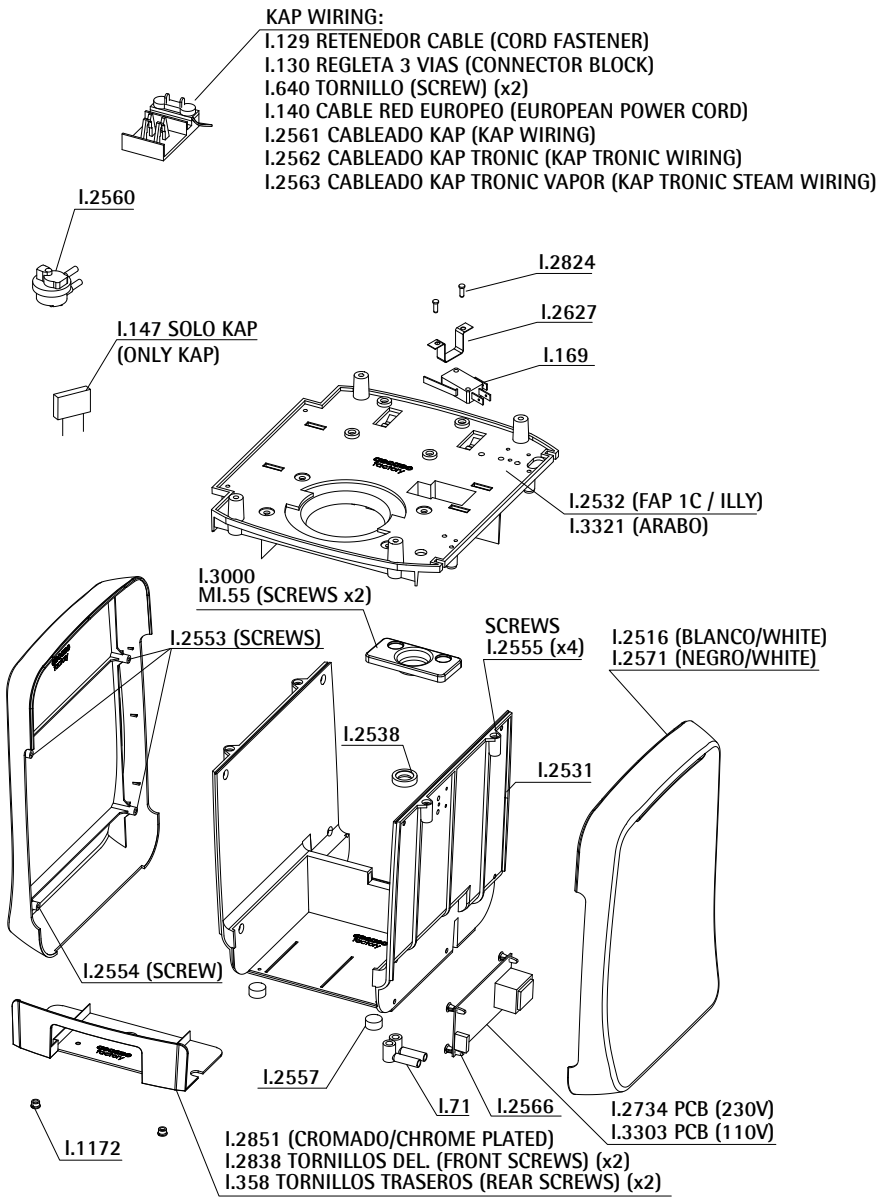

ALTA CALIDAD GARANTIZADA ascaso desde 1962

GARANTÍA TOTAL

ascaso ofrece garantía de seriedad en el servicio y primera calidad en todos los artículos.

Ref.	Descripción	Description
I...17	JUNTA TORICA	*SILICONE RING*
I...80	ROTECTOR TUBO VAPOR NEGRO	STEAM PIPE BLACK PROTECTOR
I..816	PIÑA VAPOR CON ROSCA	*THREADED STEAM STEP*
I..820	TUBO CAPPUCCINO	CAPPUCCINO STEEL PIPE
I..859	PROTECTOR TUBO VAPOR BLANCO	STEAM PIPE WHITE PROTECTOR
I.2414	TORNILLO CL81Z 4.1X12	*SCREW CL81Z 4.1X12*
I.2512	DEPOSITO AGUA KAP	*KAP WATER TANK*
I.2513	DEPOSITO CAPSULAS KAP	*KAP CAPSULE TRAY*
I.2518	BANDEJA BLANCA KAP	*KAP WATER TRAY (WHITE)*
I.2519	ALZA ESCURRIDOR KAP	*KAP UPPER WATER TRAY*
I.2539	VALVULA DEPOSITO KAP	*KAP WATER TANK VALVE*
I.2540	MUELLE VALVULA AGUA KAP	*KAP WATER TANK SPRING*
I.2541	TORICA DEPOSITO AGUA KAP	*KAP WATER TANK O-RING*
I.2546	TUBO VAPOR KAP	*KAP STEAM PIPE*
I.2574	BANDEJA NEGRA KAP	*KAP WATER TRAY (BLACK)*
I.2578	CHAPA SOPORTE TUBO VAPOR KAP	*KAP STEAM TUBE SUPPORT PLATE*
I.2850	ESCURRIDOR KAP CROMADO	*CHROME COLANDER KAP*
PM.143	CJTO DEPOSITO KAP	*WHOLE TANK KAP*

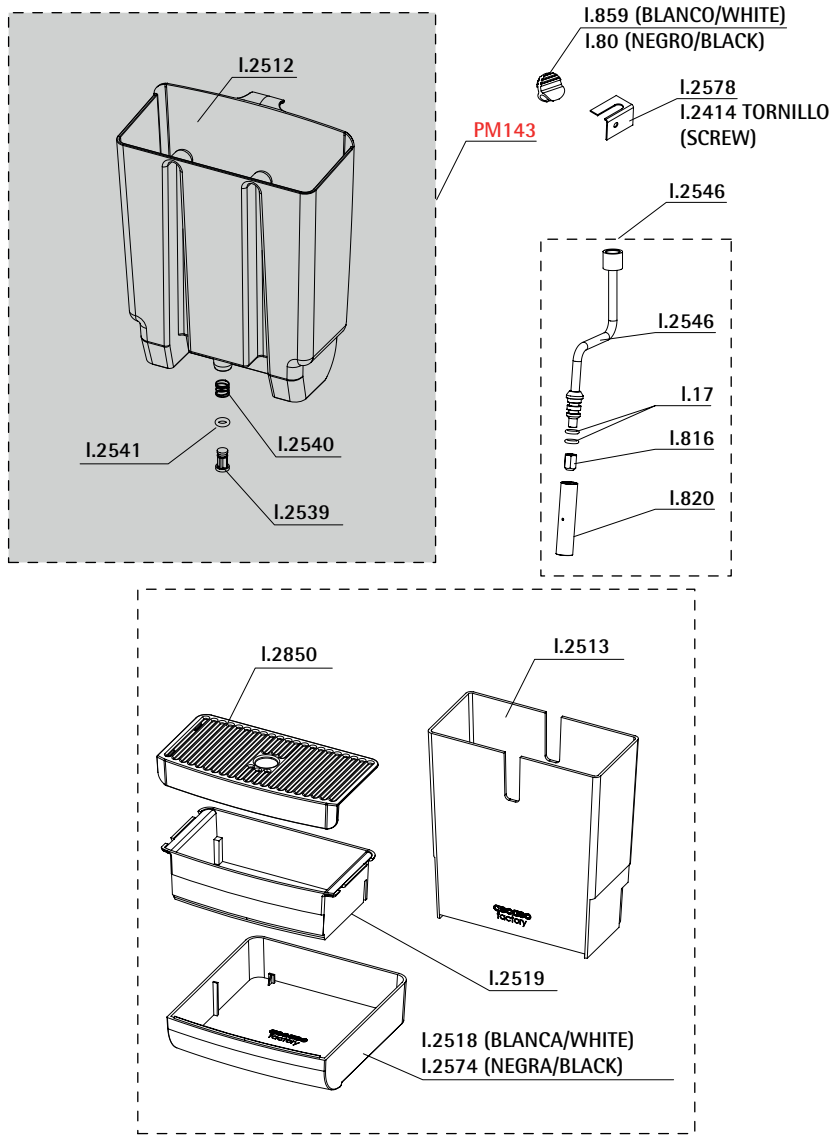

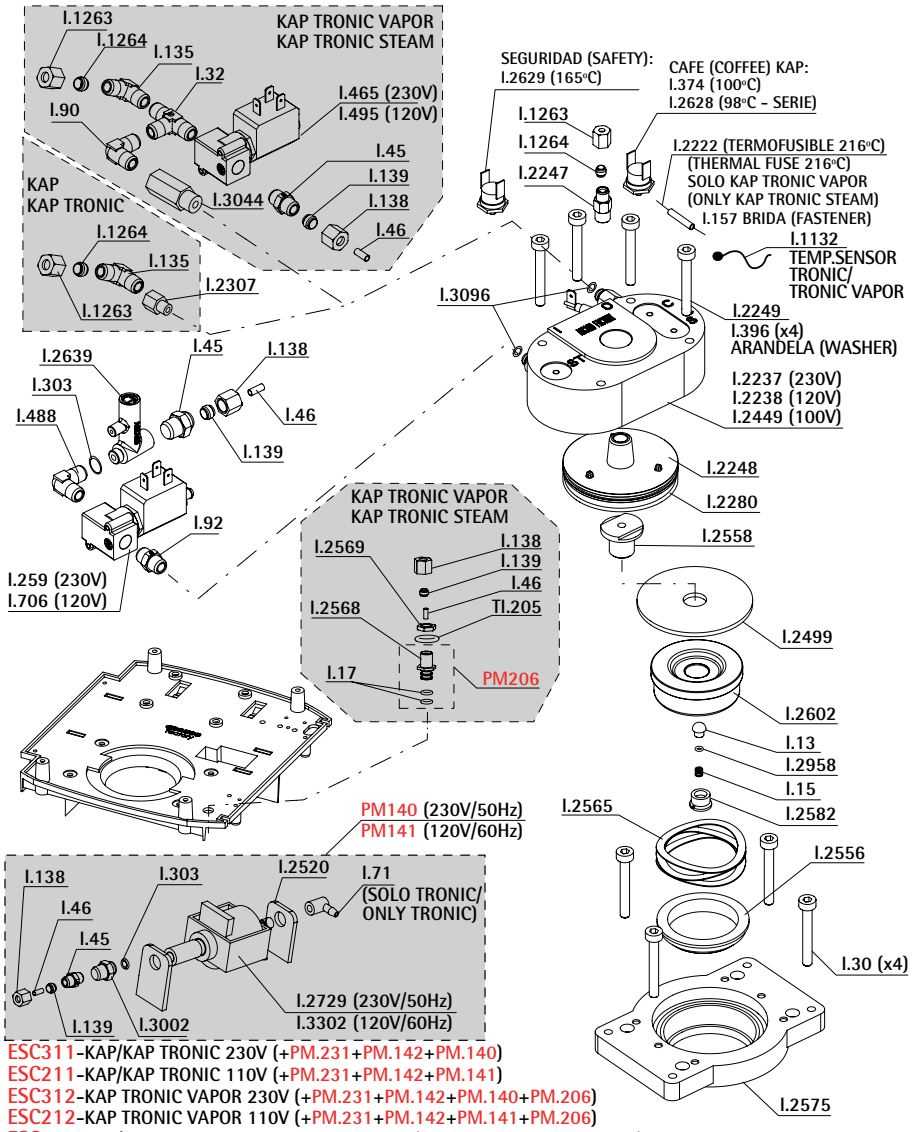

ESC311-KAP/KAP TRONIC 230V (+PM.231+PM.142+PM.140)
ESC211-KAP/KAP TRONIC 110V (+PM.231+PM.142+PM.141)
ESC312-KAP TRONIC VAPOR 230V (+PM.231+PM.142+PM.140+PM.206)
ESC212-KAP TRONIC VAPOR 110V (+PM.231+PM.142+PM.141+PM.206)
ESC417-KAP/KAP TRONIC CAPSULA ARABO 230V (+PM.249+PM.250+PM.140)
ESC418-KAP TRONIC VAPOR CAPSULA ARABO 230V (+PM.249+PM.250+PM.140+PM.206)

Ref.	Descripción	Description
I...13	VALVULA SILICONA	*SILICONE VALVE*
I...15	MUELLE VALVULA RETENCION	*SPRING*
I...17	JUNTA TORICA	*SILICONE RING*
I...30	TORNILLO FIJACION INTERCAMB. INOX	*SCREW*
I...32	RACOR T NIQUEL QUIMICO	*T FITTING*
I...45	RACOR RECTO	*STRAIGHT FITTING*
I...46	REFUERZO TUBO	*PIPE REINFORCEMET*
I...71	PIPETA ASPIRACION	*90º FITTING*
I...90	RACOR CODO MACHO 1/8" LATON	*FITTING*
I...92	RACOR 1/8"	*FITTING MALE*
I..135	RACOR CODO 13280 4 1/8"	*FITTING*
I..138	TUERCA BICONO	*NUT*
I..139	BICONO DIAMETRO 6 mm	*BICONE*
I..157	BRIDA FIJACION FUSIBLE/TERMOMETRO	*SPRING*
I..259	ELECTROVALVULA 3 VIAS 230V	*3 WAY SOLENOID 230V*
I..303	TORICA S-2	*S-2 RING*
I..374	TERMOSTATO 100º	*100º THERMOSTAT*
I..396	ARANDELA DENTADA M5 INOX	*WASHER*
I..465	ELECTROVALVULA 2 VIAS 230V	*2 WAY SOLENOID 230V*
I..488	RACOR CODO 1/8 M-H	*1/8 M-H ELBOW FITTING*
I..495	ELECTROVALVULA 2 VIAS 120V	*2 WAY SOLENOID 120V*
I..706	ELECTROVALVULA 3 VIAS 120V	*3 WAY SOLENOID 120V*
I.1132	SONDA TEMPERATURA PTP-51F	*TEMPERATURE PROBE PTP-51F*
I.1263	TUERCA BICONO 4	*BICONE NUT 4*
I.1264	BICONO 4mm	*BICONE 4*
I.2222	CABLE FUSIBLE 216ºC	*STEAM WIRE - 216ºC*
I.2237	CONJUNTO INTERCAMBIADOR INOX. 230V	*THERMOBLOCK INOX. 230V*
I.2238	CONJUNTO INTERCAMBIADOR INOX. 1000W 120V	*THERMOBLOCK INOX. 1000W 120V*
I.2247	RACORD CONEXION SOLO CAFE	*FITTING*
I.2248	TAPA NUEVO INTERCAMBIADOR	*LID*
I.2249	TORNILLO ALLEN M5X50 DIN912 INOX	*SCREW*
I.2280	JUNTA TORICA 68x2 SILICONA	*O-RING 68x2 SILICONE*
I.2307	PROLONGACION GRUPO BASIC	*BASIC COFFEE GROUP EXTENSION*
I.2449	CONJUNTO INTERCAMBIADOR INOX 1000W 100V	*THERMOBLOCK INOX 1000W 100V*
I.2499	MEMBRANA KAP	*SILICONE WASHER KAP*
I.2520	SOPORTE BOMBA KAP	*KAP PUMP SUPPORT*
I.2556	CASQ. SOP. MUELLE GRUPO CAPSULA	*WASHER SPRING SUPPORT*
I.2558	CUERPO VALVULA RETENCION KAP	*VALVE FITTING KAP*
I.2565	MUELLE EMBOLO G. CAPSULA AUTOEXPULSION	*SPRING FOR CAPSULE BREWING*
I.2568	RACOR VAPOR KAP	*KAP STEAM CONNECTOR*
I.2569	TUERCA RACORD VAPOR KAP	*KAP STEAM CONNECTOR NUT*
I.2575	CAMARA COMPRESION KAP	*KAP PISTON SUPPORT*
I.2582	TUERCA VALVULA RETENCION KAP	*KAP RETENTION VALVE NUT*
I.2602	EMBOLO GRUPO CAPSULA (MUELLE)	*UPPER GROUP PART*
I.2628	TERMOSTATO 98º KAP	*THERMOSTAT 98º KAP*
I.2629	TERMOSTATO SEGURIDAD 165º KAP	*SAFETY THERMOSTAT 165º KAP*
I.2639	BY-PASS ASCASO	*BY-PASS ASCASO*
I.2729	BOMBA CP SMART 20bar 230-240V 50W	*PUMP CP SMART 20bar 230-240V 50W*
I.2958	ARANDELA APOYO	*WASHER*
I.3002	RACOR BOMBA	*PUMP FITTING*
I.3044	PROLONGACION KAP TRONIC VAPOR	*PROLONGATION KAP TRONIC STEAM*
I.3096	JUNTA INTERCAMBIADOR	*HEAT EXCHANGER GASKET*
I.3302	BOMBA CP SMART 20bar 120V	*PUMP CP SMART 20bar 120V*
ESC211	GRUPO THERM.KAP/KAP TRONIC 110V	*GROUP THERM.KAP/KAP TRONIC 110V*
ESC212	GRUPO THERM.KAP/KAP TRONIC VAPOR 110V	*GROUP THERM.KAP/KAP TRONIC STEAM 110V*
ESC311	GRUPO THERM.KAP/KAP TRONIC 230V	*GROUP THERM.KAP/KAP TRONIC 230V*
ESC312	GRUPO THERM.KAP TRONIC VAPOR 230V	*GROUP THERM.KAP TRONIC STEAM 230V*
ESC417	GRUPO THERM.KAP/KAP TRONIC ARABO 230V	*GROUP THERM.KAP/KAP TRONIC ARABO 230V*
ESC418	GRUPO THERM.KAP TRONIC VAPOR ARABO 230V	*GROUP THERM.KAP TRONIC STEAM ARABO 230V*
TI.205	ARANDELA DENTADA	*FLUTED NUT*
PM.140	CJTO BOMBA KAP 230V	*WHOLE PUMP KAP 230V*
PM.141	CJTO BOMBA KAP 120V	*WHOLE PUMP KAP 120V*
PM.142	CJTO CARRO GRUPO KAP 1C	*WHOLE GUIDES GROUP KAP 1C*
PM.206	CJTO. RACOR VAPOR KAP	*STEAM FITTING ENSEMBLE KAP*
PM.231	CJTO SOPORTE CARRO KAP 1C	*1C KAP SUPPORT*
PM.249	CJTO SOPORTE CARRO KAP CAP. ARABO	*1C KAP CAPSULE ARABO SUPPORT*
PM.250	CJTO CARRO GRUPO KAP CAPSULA ARABO	*WHOLE GUIDES GROUP KAP CAP. ARABO*

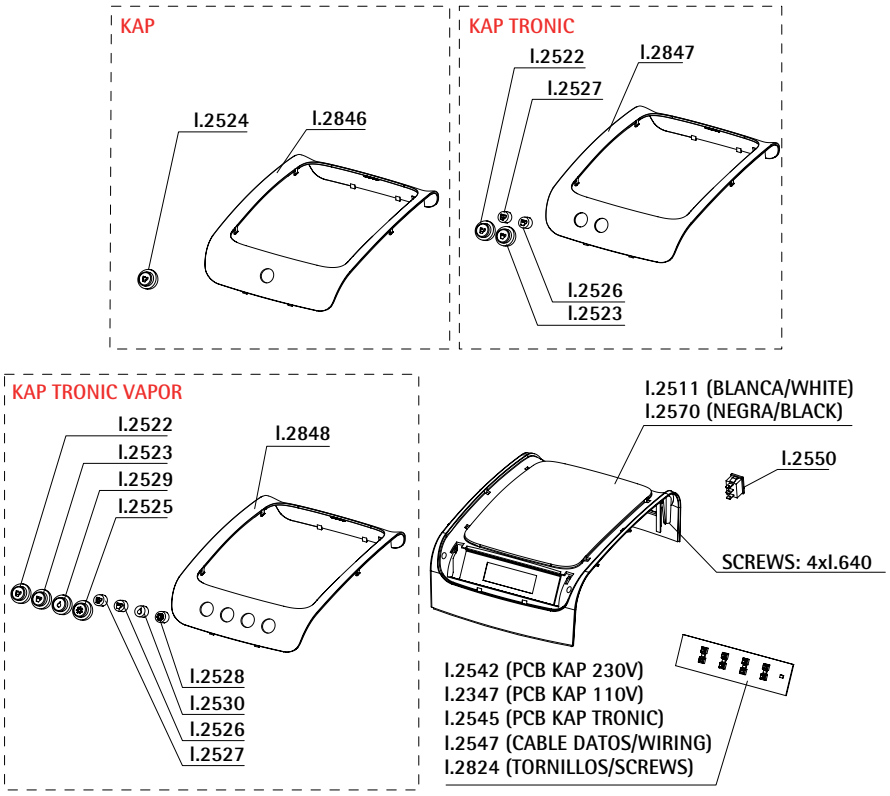

I.2597 (SOLO TRONIC/ONLY TRONIC)
MEMBRANA SOPORTE TECLAS (1 x BOTON)
KEYPAD SUPPORT (1 x BUTTON)

PM194 CJTO. TAPA SUPERIOR KAP BLANCA 230V (KAP WHITE)
PM195 CJTO. TAPA SUPERIOR KAP NEGRA 230V (KAP BLACK)
PM237 CJTO. TAPA SUPERIOR KAP BLANCA 120V (KAP WHITE)
PM236 CJTO. TAPA SUPERIOR KAP NEGRA 120V (KAP BLACK)
PM198 CJTO. TAPA SUPERIOR KAP TRONIC BLANCA (KAP TRONIC WHITE)
PM199 CJTO. TAPA SUPERIOR KAP TRONIC NEGRA (KAP TRONIC BLACK)
PM202 CJTO. TAPA SUPERIOR KAP TRONIC VAPOR BLANCA (KAP TRONIC STEAM WHITE)
PM203 CJTO. TAPA SUPERIOR KAP TRONIC VAPOR NEGRA (KAP TRONIC STEAM BLACK)

Ref.	Descripción	Description
I..640	TORNILLO RETENEDOR CABLE INOX	*WIRE SCREW*
I.2347	CIRCUITO PULSADORES CAFE KAP 120V	*COFFEE KAP PUSH BUTTON PCB 120V*
I.2511	TAPA SUPERIOR BLANCA KAP	*KAP TOP LID (WHITE)*
I.2522	BOTON TECLA CAFE CORTO KAP	*KAP SHORT COFFEE PUSH BUTTON*
I.2523	BOTON TECLA CAFE LARGO KAP	*KAP LARGE COFFEE PUSH BUTTON*
I.2524	BOTON TECLA SIMPLE CAFE KAP	*KAP SINGLE COFFEE PUSH BUTTON*
I.2525	BOTON TECLA VAPOR KAP	*KAP STEAM PUSH BUTTON*
I.2526	BOTON TECLA LED CAFE LARGO KAP	*KAP LARGE COFFE LED BUTTON*
I.2527	BOTON TECLA LED CAFE CORTO KAP	*KAP SHORT COFFEE LED BUTTON*
I.2528	BOTON TECLA LED VAPOR KAP	*KAP STEAM LED BUTTON*
I.2529	BOTON TECLA AGUA KAP	*KAP WATER PUSH BUTTON*
I.2530	BOTON TECLA LED AGUA KAP	*KAP WATER LED BUTTON*
I.2542	CIRCUITO PULSADORES CAFE KAP 230V	*KAP COFFEE PCB 230V*
I.2545	CIRCUITO PULSADORES AUTO STOP KAP	*KAP AUTO STOP PCB*
I.2547	CABLEADO BOTONERA AUTO STOP KAP	*KAP AUTO STOP PCB WIRING*
I.2550	INT. ON-OFF KAP	*KAP ON/OFF SWITCH*
I.2570	TAPA SUPERIOR NEGRA KAP	*KAP TOP LID (BLACK)*
I.2597	SOPORTE TECLAS KAP	*SUPPORT*
I.2824	TORNILLO DIN 7504/N ST-3,5 (L=9,5mm) INOX	*SCREW*
I.2846	EMBELLECEDOR KAP CROMADO	*EMBELLISH PANNEL KAP*
I.2847	EMBELLECEDOR KAP TRONIC CROMADO	*EMBELLISH PANNEL KAP TRONIC*
I.2848	EMBE. KAP TRONIC VAPOR CROMADO	*EMB. PANNEL KAP TRONIC STEAM*
PM.194	CJTO. TAPA SUPERIOR KAP BLANCA 230V	*UP. CAP ENSEMBLE KAP WHITE 230V*
PM.195	CJTO. TAPA SUPERIOR KAP NEGRA 230V	*UP. CAP ENSEMBLE KAP BLACK 230V*
PM.198	CJTO. TAPA SUPERIOR KAP TRONIC BLANCA	*UP. CAP ENSEMBLE KAP TRONIC WHITE*
PM.199	CJTO. TAPA SUPERIOR KAP TRONIC NEGRA	*UP. CAP ENSEMBLE KAP TRONIC BLACK*
PM.202	CJTO. TAPA SUP. KAP TRONIC VAPOR BLANCA	*UP. CAP ENSEMB.KAP TRONIC STEAM WHITE*
PM.203	CJTO. TAPA SUP. KAP TRONIC VAPOR NEGRA	*UP. CAP ENSEMB.KAP TRONIC STEAM BLACK*
PM.236	CJTO. TAPA SUPERIOR KAP NEGRA 120V	*UP. CAP ENSEMBLE KAP BLACK 120V*
PM.237	CJTO. TAPA SUPERIOR KAP BLANCA 120V	*UP. CAP ENSEMBLE KAP WHITE 120V*

Conjunto tirador KAP (-01/2016) ■ KAP set handle (-01/2016)

Ref.	Descripción	Description
I...15	MUELLE VALVULA RETENCION	*SPRING*
I...99	TORNILLO M3x8 INOX	*SCREW*
I..358	TORNILLO PORTADUCHA M4 INOX	*M4 SCREW*
I..813	TORNILLO DIN 965 M4 X 10 INOX	*SCREW*
I.2502	GUIA PISTON	*PISTON GUIDE*
I.2506	RAMPA CAPSULA FAP	*CAPSULE FAP RAMP*
I.2509	PISTON G.AUT. CAPSULA	*CAPSULE BREWING UNIT PISTON*
I.2573	RAMPA CAPSULA ARABO KAP	*KAP ARABO CAPSULE SUPPORT*
I.2579	ARANDELA SEGURIDAD DIN6799 4mm	*DIN6799 WASHER 3.2mm*
I.2584	CIERRE S.CREMA KAP	*EXTRA CREAM STOP KAP*
I.2587	VALVULA S.CREMA KAP	*KAP S.CREAM VALVE*
I.2590	JUNTA SALIDA CAFE BAR KAP/KAP	*OUT GASKET COFFEE BAR KAP*
I.2591	ALOJAMIENTO TOPE EXPULSION 1C	*SUPPORT 1C*
I.2592	ALOJAMIENTO EXPULSION 1C ARABO	*SUPPORT 1C ARABO*
I.2594	TOPE EXPULSION 1C	*EXPULSION 1C STOP*
I.2595	TOPE EXPULSION 1C ARABO	*EXPULSION 1C ARABO STOP*
I.2598	TORNILLO DIN-965 M3X10 INOX	*SCREW DIN-965 M3X10*
I.2599	MUELLE TOPE EXPULSION KAP	*SPRING*
I.2813	SALIDA CAFE KAP/BAR KAP	*COFFEE EXIT KAP/BAR KAP*
I.2875	MUELLE PINZA	*MOBILE PLIERS SPRING*
I.2958	ARANDELA APOYO	*WASHER*
I.2976	EJE GIRO PINZAS	*PLIERS SPIN AXLE*
I.2977	BASE PINZA FAP	*FAP PLIERS BASE*
I.2978	PINZA MOVIL FAP	*MOBILE PLIERS FAP*
I.2979	BASE PINZA ARABO	*ARABO PLIER BASE*
I.2980	PINZA MOVIL ARABO	*MOBILE PLIER ARABO*
I.3015	CHAPA REFUERZO	*SUPPORT*
I.3023	ARANDELA GROWER DIN127 A2 DIA.3	*WASHER GROWER DIN127 A2*
I.3031	REFUERZO LATERAL GRUPO	*SIDE RENFORCEMENT GROUP*
I.3032	TORNILLO M3x10 DIN7985 INOX A-4	*SCREW M3x10 DIN7985 INOX*
I.3073	PROTECTOR GUIAS KAP/BAR KAP	*PROTECTOR*
I.3092	RAMPA CAPSULA ILLY	*CAPSULE RAMP ILLY*
I.3140	SOPORTE G.AUT.CAPSULA KAP	*KAP .AUT.BREWING UNIT SUPORT*
I.3144	CARRO KAP CROMADO	*CHROMING CAR KAP*
PM.142	CJTO CARRO GRUPO KAP 1C	*WHOLE GUIDES GROUP KAP 1C*
PM.217	PINZA FAP COMPLETA	*COMPLETE FAP PLIER*
PM.218	PINZA ARABO COMPLETA	*COMPLETE ARABO PLIER*
PM.231	CJTO SOPORTE CARRO KAP 1C	*1C KAP SUPPORT*
PM.249	CJTO SOPORTE CARRO KAP CAP. ARABO	*1C KAP CAPSULE ARABO SUPPORT*
PM.250	CJTO CARRO GRUPO KAP CAP. ARABO	*WHOLE GUIDES GROUP KAP CAP. ARABO*
PM.251	CJTO SOPORTE CARRO KAP ILLY	*ILLY KAP SUPPORT*

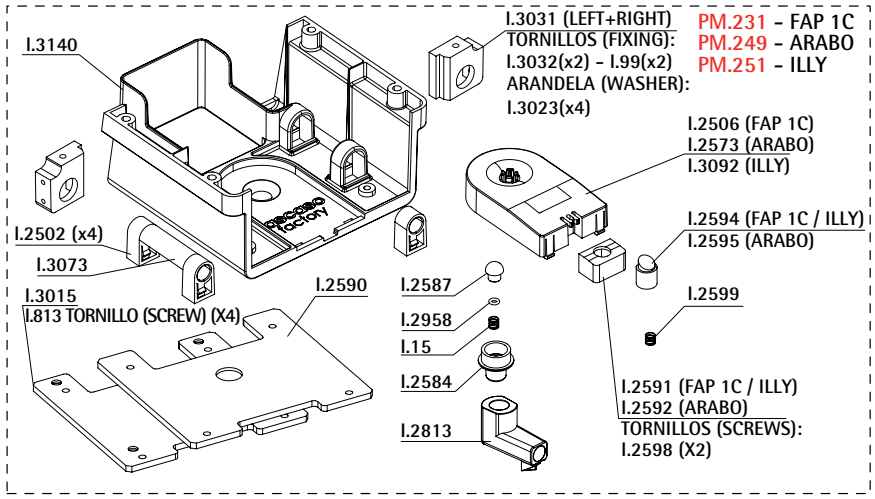

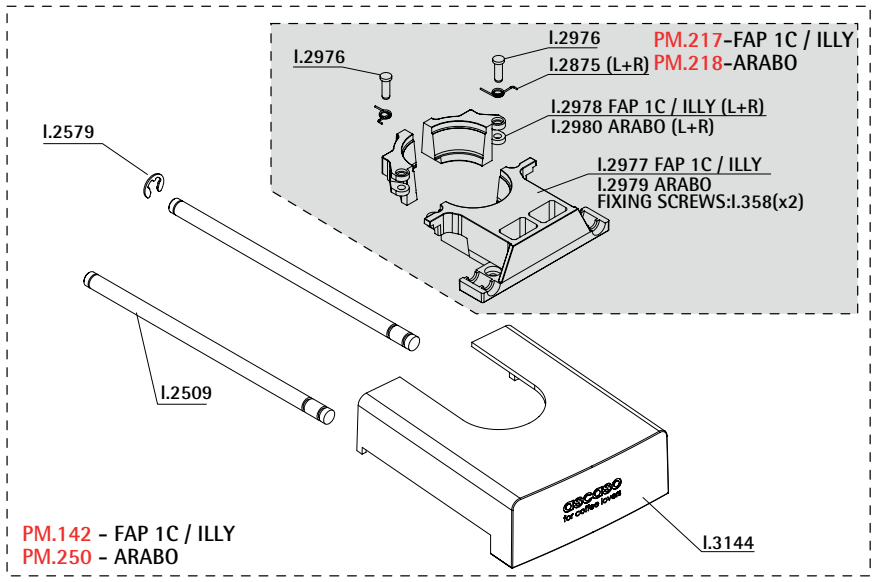

Conjunto tirador KAP (+01/2016) ■ KAP set handle (+01/2016)

Ref.	Descripción	Description
I...15	MUELLE VALVULA RETENCION	*SPRING*
I..358	TORNILLO PORTADUCHA M4 INOX	*M4 SCREW*
I..813	TORNILLO DIN 965 M4 X 10 INOX	*SCREW*
I.2506	RAMPA CAPSULA FAP	*CAPSULE FAP RAMP*
I.2509	PISTON G.AUT. CAPSULA	*CAPSULE BREWING UNIT PISTON*
I.2573	RAMPA CAPSULA ARABO KAP	*KAP ARABO CAPSULE SUPPORT*
I.2579	ARANDELA SEGURIDAD DIN6799 4mm	*DIN6799 WASHER 3.2mm*
I.2584	CIERRE S.CREMA KAP	*EXTRA CREAM STOP KAP*
I.2587	VALVULA S.CREMA KAP	*KAP S.CREAM VALVE*
I.2590	JUNTA SALIDA CAFE BAR KAP/KAP	*OUT GASKET COFFEE BAR KAP*
I.2591	ALOJAMIENTO TOPE EXPULSION 1C	*SUPPORT 1C*
I.2592	ALOJAMIENTO EXPULSION 1C ARABO	*SUPPORT 1C ARABO*
I.2594	TOPE EXPULSION 1C	*EXPULSION 1C STOP*
I.2595	TOPE EXPULSION 1C ARABO	*EXPULSION 1C ARABO STOP*
I.2598	TORNILLO DIN-965 M3X10 INOX	*SCREW DIN-965 M3X10*
I.2599	MUELLE TOPE EXPULSION KAP	*SPRING*
I.2813	SALIDA CAFE KAP/BAR KAP	*COFFEE EXIT KAP/BAR KAP*
I.2875	MUELLE PINZA	*MOBILE PLIERS SPRING*
I.2958	ARANDELA APOYO	*WASHER*
I.2976	EJE GIRO PINZAS	*PLIERS SPIN AXLE*
I.2977	BASE PINZA FAP	*FAP PLIERS BASE*
I.2978	PINZA MOVIL FAP	*MOBILE PLIERS FAP*
I.2979	BASE PINZA ARABO	*ARABO PLIER BASE*
I.2980	PINZA MOVIL ARABO	*MOBILE PLIER ARABO*
I.3015	CHAPA REFUERZO	*SUPPORT*
I.3092	RAMPA CAPSULA ILLY	*CAPSULE RAMP ILLY*
I.3140	SOPORTE G.AUT.CAPSULA KAP	*KAP .AUT.BREWING UNIT SUPORT*
I.3144	CARRO KAP CROMADO	*CHROMING CAR KAP*
I.3645	COJINETE GUIA KAP/BAR KAP	*KAP/BAR KAP BEARING GUIDE*
I.3689	TUBO TEFLON 12x10 L=24.5	*TEFLON PIPE 12x10 L=24.5*
PM.142	CJTO CARRO GRUPO KAP 1C	*WHOLE GUIDES GROUP KAP 1C*
PM.217	PINZA FAP COMPLETA	*COMPLETE FAP PLIER*
PM.218	PINZA ARABO COMPLETA	*COMPLETE ARABO PLIER*
PM.231	CJTO SOPORTE CARRO KAP 1C	*1C KAP SUPPORT*
PM.249	CJTO SOPORTE CARRO KAP CAP. ARABO	*1C KAP CAPSULE ARABO SUPPORT*
PM.250	CJTO CARRO GRUPO KAP CAP. ARABO	*WHOLE GUIDES GROUP KAP CAP. ARABO*
PM.251	CJTO SOPORTE CARRO KAP ILLY	*ILLY KAP SUPPORT*

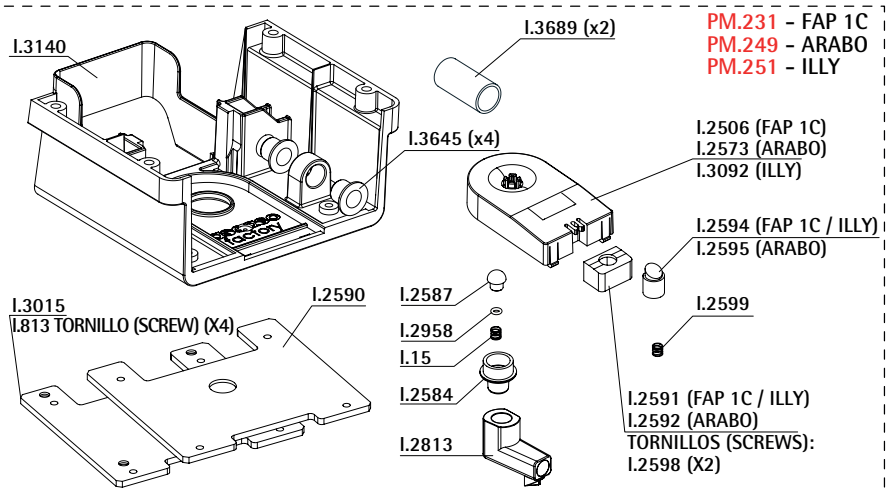

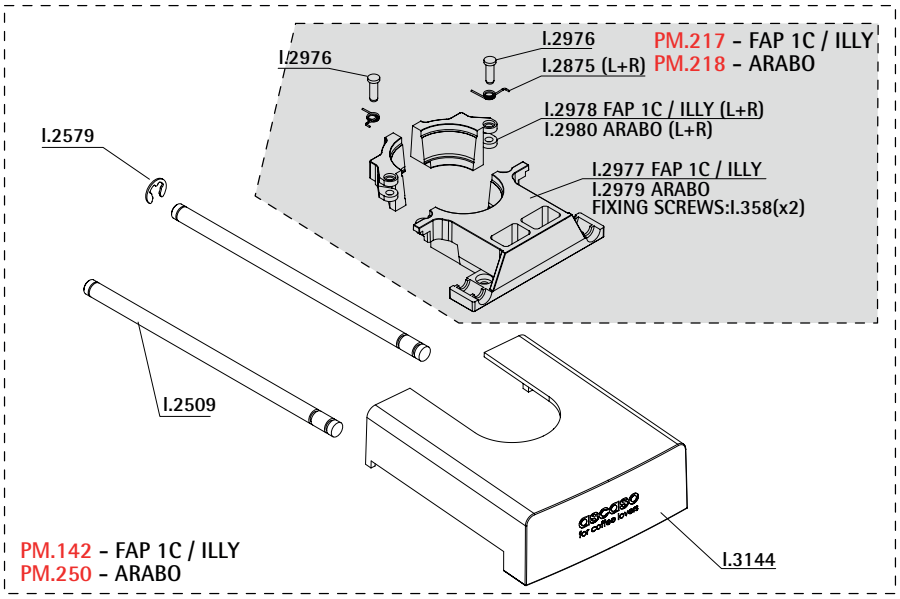

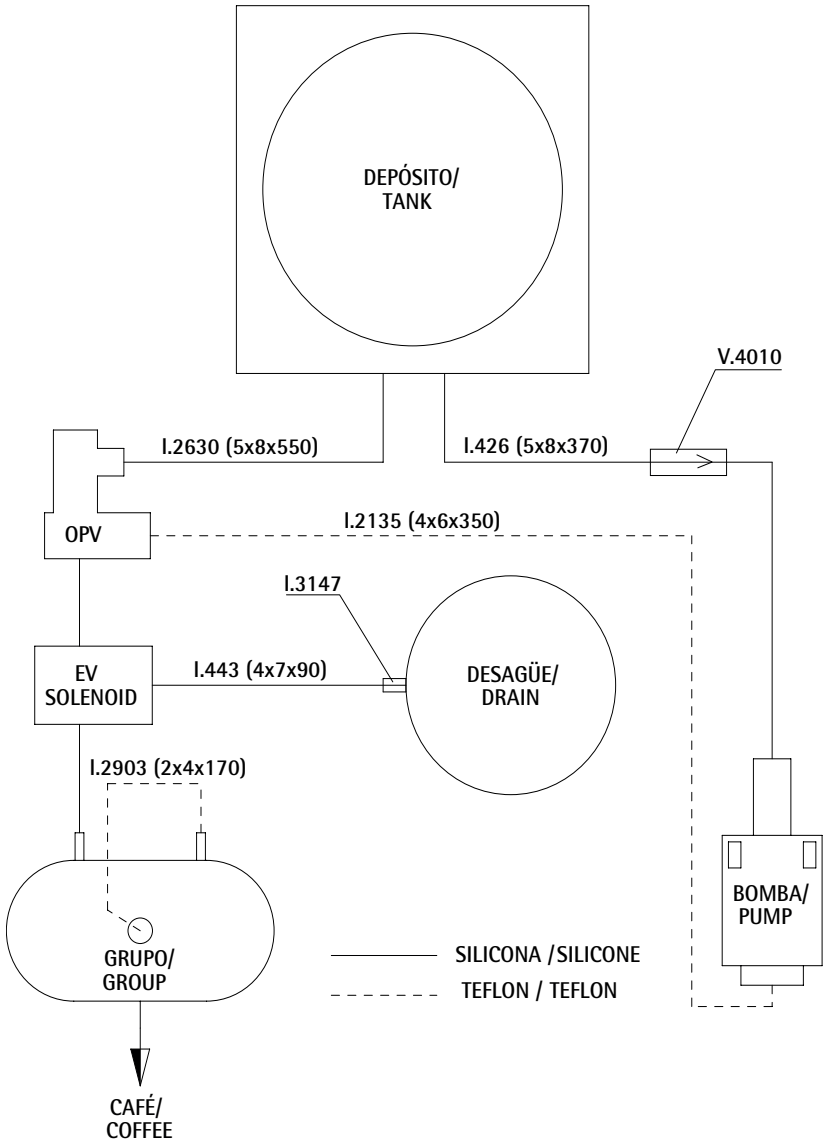

Ref.	Descripción	*Description*
I..426	TUBO SILICONA 5x8 (370mm)	*SILICONE PIPE 5x8 (370mm)*
I..443	TUBO SILICONA 4x7 (90mm)	*SILICONE PIPE 4x7 (90mm)*
I.2135	TUBO TEFLON 4x6 (350mm)	*TEFLON PIPE 4x6 (350mm)*
I.2630	TUBO SILICONA 5x8 (550mm)	*SILICONE PIPE 5x8 (550mm)*
I.2903	TUBO TEFLON 2x4 (170mm)	*TEFLON PIPE 2x4 (170mm)*
I.3147	FILTRO VAPOR	*FILTER STEAM*
V.4010	VALVULA ANTI RETORNO	*NO RETURN VALVE*

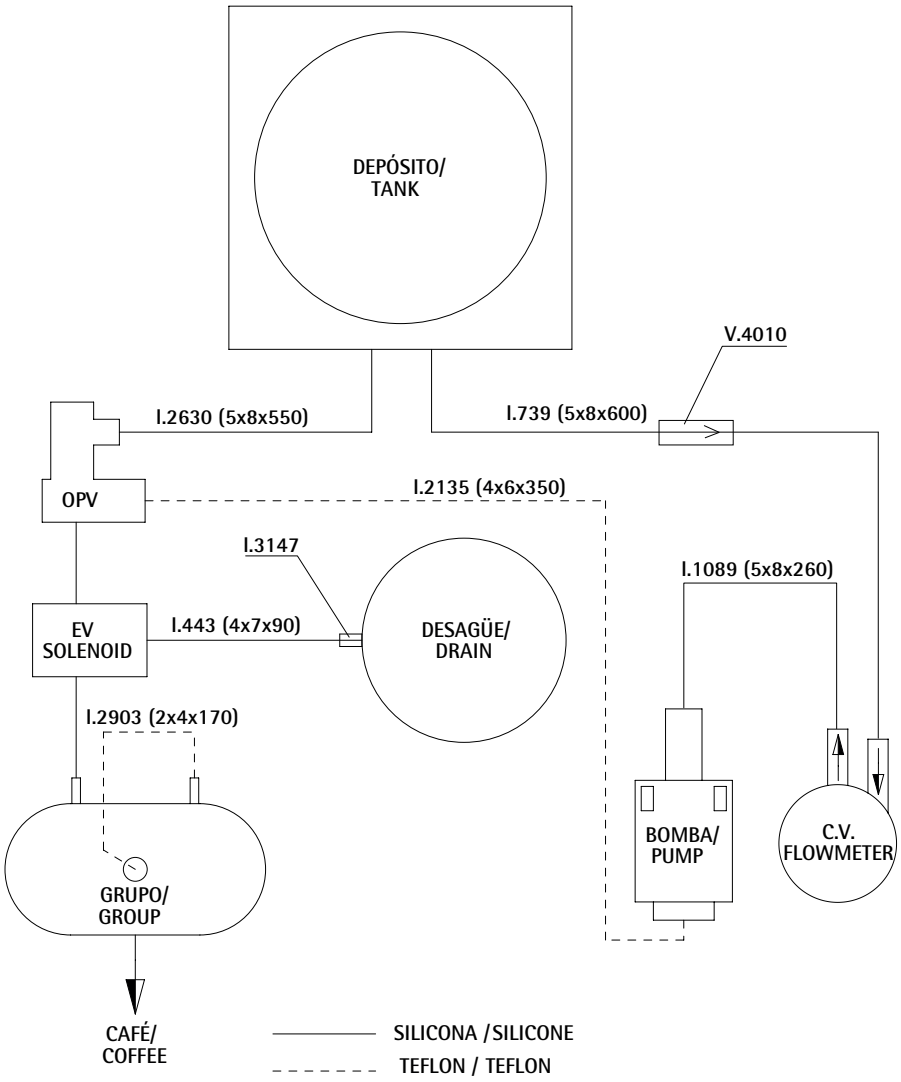

Ref.	Descripción	*Description*
I..443	TUBO SILICONA 4x7 (90mm)	*SILICONE PIPE 4x7 (90mm)*
I..739	TUBO SILICONA 5x8 (600mm)	*SILICONE PIPE 5x8 (600mm)*
I.1089	TUBO SILICONA 5X8 (260mm)	*SILICONE PIPE 5x8 (260mm)*
I.2135	TUBO TEFLON 4x6 (350mm)	*TEFLON PIPE 4x6 (350mm)*
I.2630	TUBO SILICONA 5x8 (550mm)	*SILICONE PIPE 5x8 (550mm)*
I.2903	TUBO TEFLON 2x4 (170mm)	*TEFLON PIPE 2x4 (170mm)*
I.3147	FILTRO VAPOR	*FILTER STEAM*
V.4010	VALVULA ANTI RETORNO	*NO RETURN VALVE*

Tubos Kap Tronic Vapor ■ Kap Tronic Steam pipes

Ref.	Descripción	Description
I..419	TUBO TEFLON 4x6 (115mm)	*TEFLON PIPE 4x6 (115mm)*
I..443	TUBO SILICONA 4x7 (90mm)	*SILICONE PIPE 4x7 (90mm)*
I..739	TUBO SILICONA 5x8 (600mm)	*SILICONE PIPE 5x8 (600mm)*
I.1089	TUBO SILICONA 5X8 (260mm)	*SILICONE PIPE 5x8 (260mm)*
I.2135	TUBO TEFLON 4x6 (350mm)	*TEFLON PIPE 4x6 (350mm)*
I.2630	TUBO SILICONA 5x8 (550mm)	*SILICONE PIPE 5x8 (550mm)*
I.2852	TUBO TEFLON 2x4 (240mm)	*TEFLON PIPE 2x4 (240mm)*
I.3147	FILTRO VAPOR	*FILTER STEAM*
V.4010	VALVULA ANTI RETORNO	*NO RETURN VALVE*

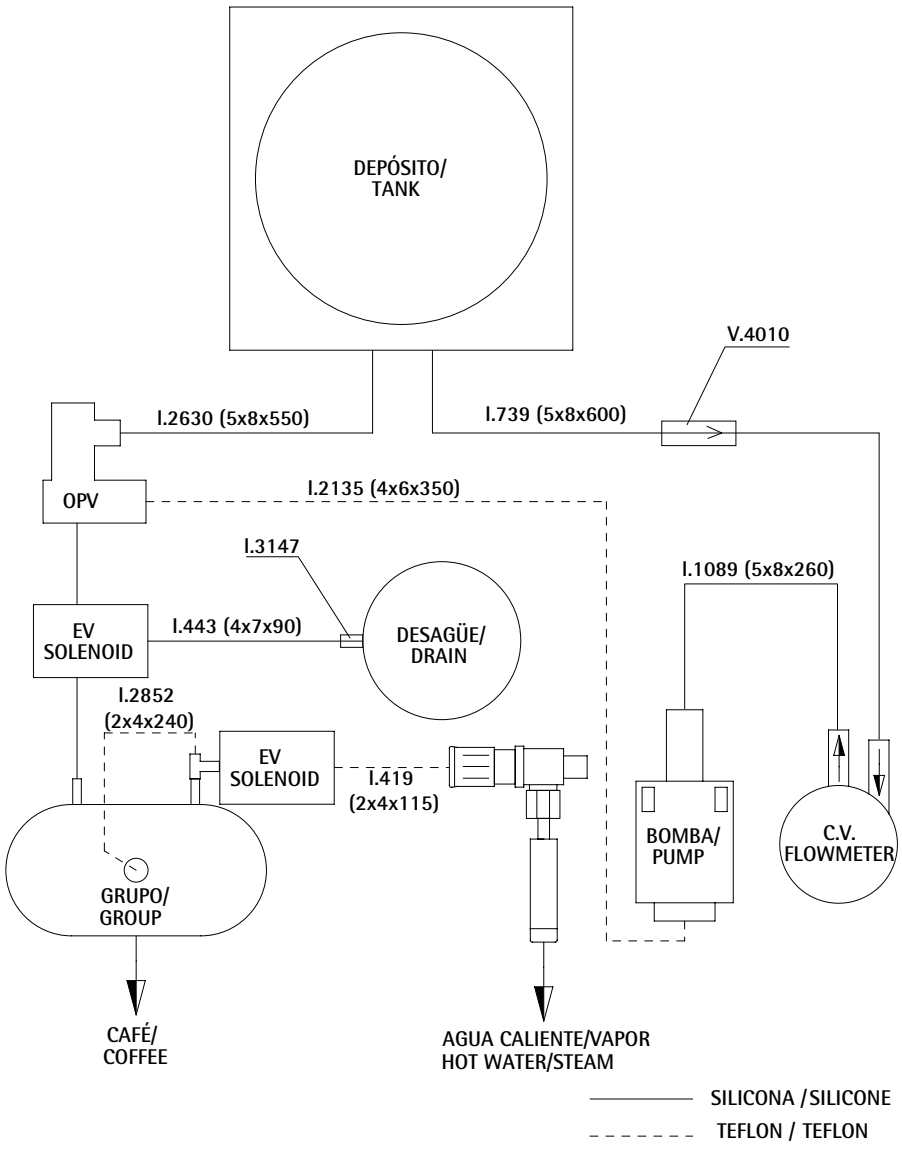

Esquema eléctrico Kap ■ KAP electric diagram

Ref.	Descripción	Description
I.2347	CIRCUITO PULSADORES CAFE KAP 110V	*KAP COFFEE PCB 110V*
I.2542	CIRCUITO PULSADORES CAFE KAP 230V	*KAP COFFEE PCB 230V*
I.2561	CABLEADO KAP	*KAP WIRING*

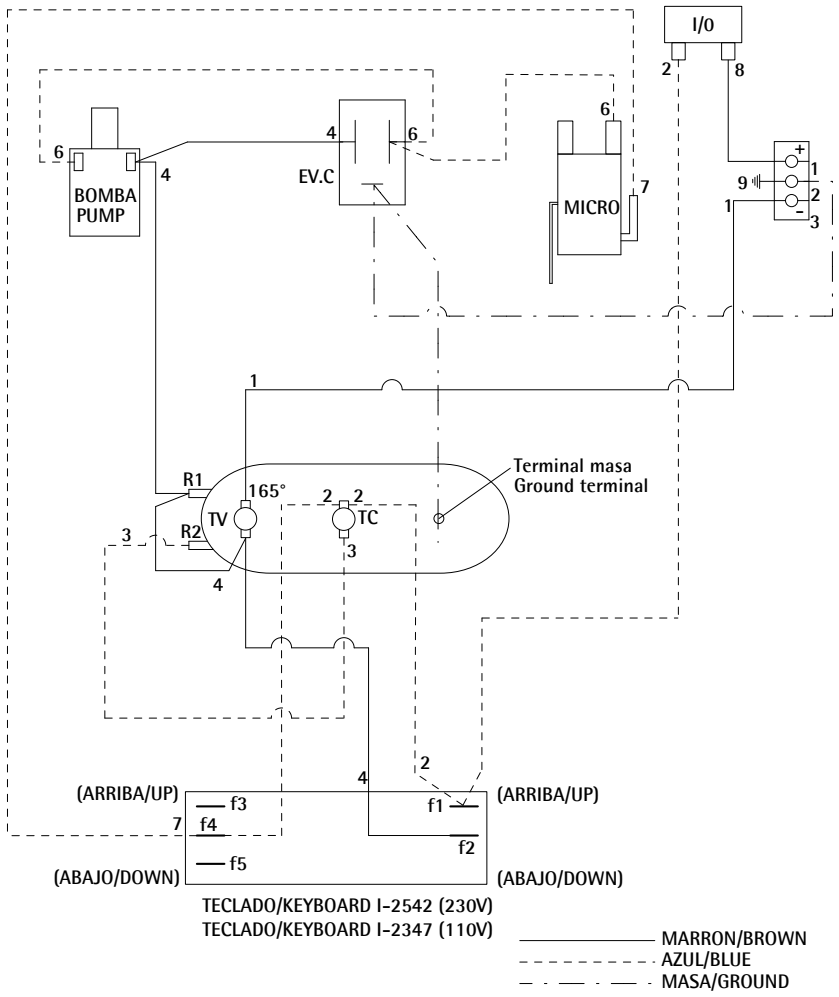

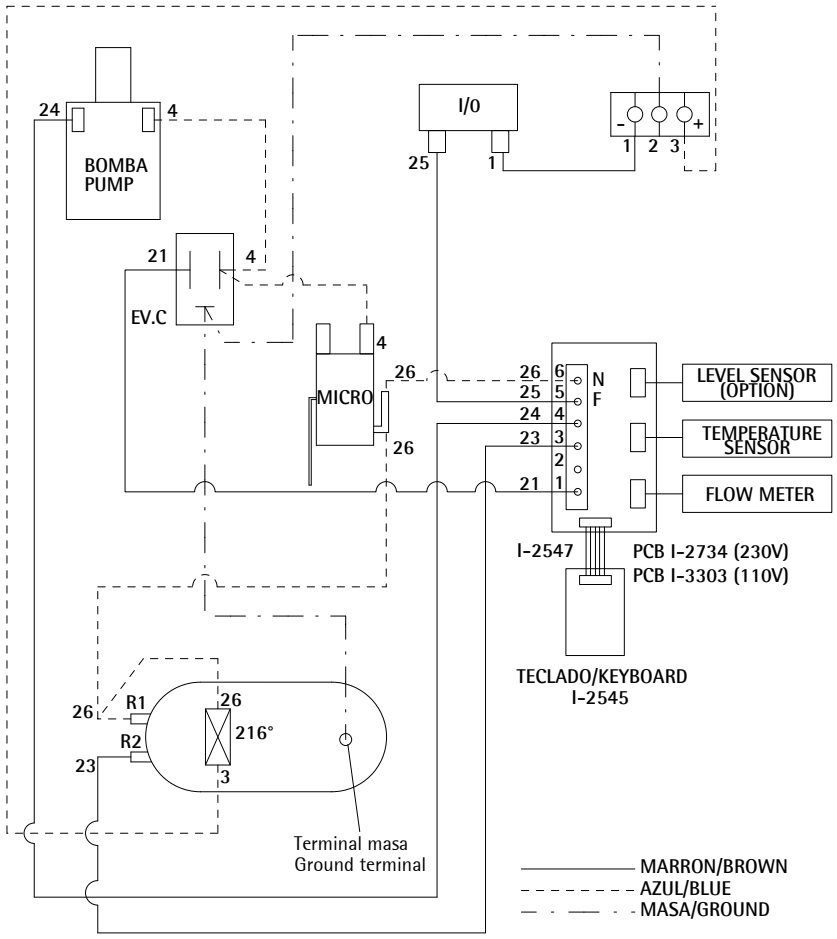

Ref.	Descripción	Description
I.2545	CIRCUITO PULSADORES AUTO STOP KAP	*KAP AUTO STOP PCB*
I.2547	CABLEADO BOTONERA AUTO STOP KAP	*KAP AUTO STOP PCB WIRING*
I.2562	CABLEADO KAP TRONIC	*KAP TRONIC WIRING*
I.2734	CIRCUITO ELECTRONICO KAP 230V	*ELECTRONIC CIRCUIT KAP 230V*
I.3303	CIRCUITO ELECTRONICO KAP 110V	*ELECTRONIC CIRCUIT KAP 110V*

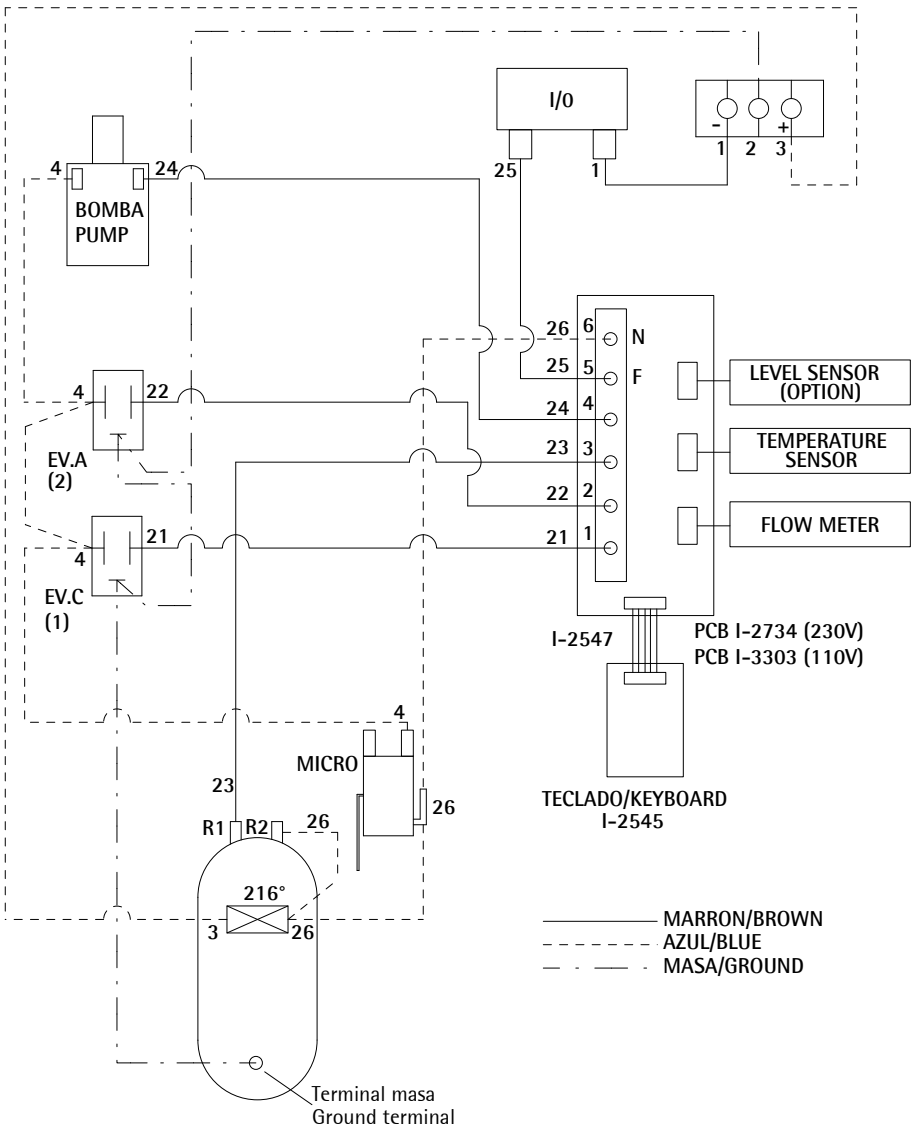

Ref.	Descripción	Description
I.2545	CIRCUITO PULSADORES AUTO STOP KAP	*KAP AUTO STOP PCB*
I.2547	CABLEADO BOTONERA AUTO STOP KAP	*KAP AUTO STOP PCB WIRING*
I.2563	CABLEADO KAP TRONIC VAPOR	*KAP TRONIC STEAM WIRING*
I.2734	CIRCUITO ELECTRONICO KAP 230V	*ELECTRONIC CIRCUIT KAP 230V*
I.3303	CIRCUITO ELECTRONICO KAP 110V	*ELECTRONIC CIRCUIT KAP 110V*