Ascaso I-1 / I-2 Diagram

Bodywork - exploded view

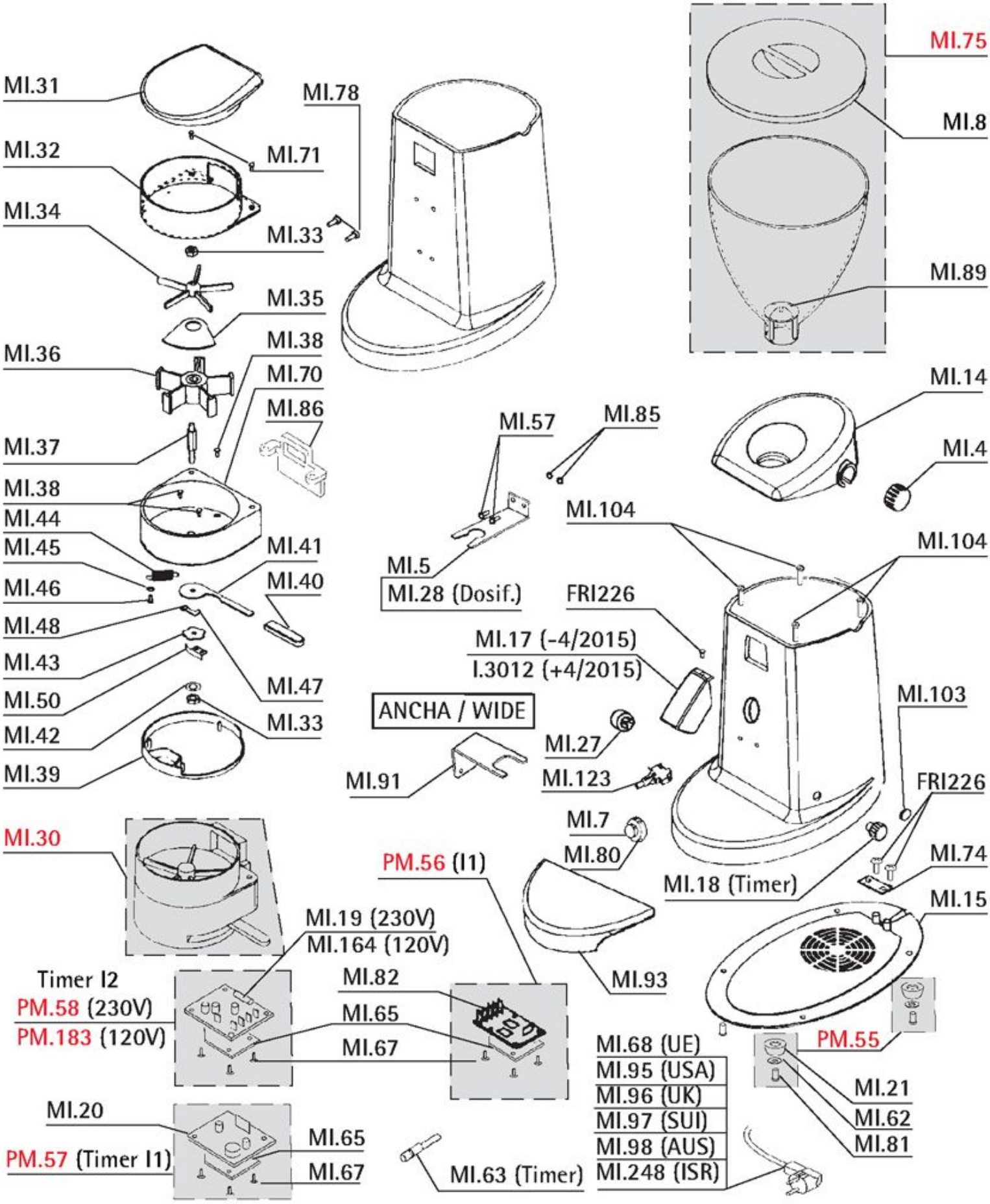

Bodywork - parts list			
SKU	Description	SKU	Description
FRI226	DIN7981 3.5x9 A4 SCREW	MI..50	SPRING
I.3012	ZAMAK NOZZLE	MI..57	SCREW
MI...4	HANDLE	MI..62	WASHER
MI...5	METAL SMALL FORK	MI..63	ROD DIMMER
MI...7	PUSH-BUTTON	MI..65	CIRCUIT PLATE
MI...8	GO TO MI.75	MI..67	SEPARATER
MI..14	UPPER LID	MI..68	220V WIRING
MI..15	LOWER LID	MI..70	DOSIMETER BODY
MI..17	COFFEE NOZZLE	MI..71	SCREW
MI..18	TIMER HANDLE	MI..74	PLATE
MI..19	TIMER I-2 CIRCUIT	MI..75	COMPLET BEAN HOPPER
MI..20	TIMER I-1 CIRCUIT	MI..78	MOTOR I2 SCREW
MI..21	FOOT	MI..80	MICRO SUPPORT
MI..27	SWITCH	MI..81	SCREW
MI..28	LARGE METAL FORK	MI..82	MOTOR CIRCUIT
MI..29	GO TO FRI226	MI..85	NUT
MI..30	DOSIMETER	MI..86	DOSIMETER SUPPORT
MI..31	DOSIMETER LID	MI..89	HANDS PROTECTOR
MI..32	DOSIMETER PLASTIC	MI..91	I1 220V TIMER WHOLE
MI..33	NUT	MI..93	TRAY
MI..34	UPPER STAR	MI..95	USA WIRING
MI..35	DOSING SECTOR	MI..96	UK WIRING
MI..36	LOWER STAR	MI..97	SWITZERLANND WIRING
MI..37	DOSIMETER CENTRAL ROD	MI..98	AUSTRALIA WIRING
MI..38	SCREW	MI.103	CAP
MI..39	LOWER DOSIMETER LID	MI.104	SCREW
MI..40	LEVER COVER	MI.123	SWITCH
MI..41	DOSIMETER LEVER	MI.164	GRINDER I-2 110V TIMER CIRCUIT
MI..42	GROWER	MI.248	ISRAEL GRINDER WIRING
MI..43	DOSIMETER PAWL	PM..55	GRINDER FOOT WHOLE
MI..44	LEVER SPRING	PM..56	I1/I1D MOTOR CIRCUIT WHOLE
MI..45	WASHER	PM..57	I1 TIMER CIRCUIT WHOLE
MI..46	SCREW	PM..58	I2 TIMER CIRCUIT WHOLE
MI..47	STOPPER	PM.183	TIMER I-2 110V
MI..48	TRIGGER PAWL		

Groups - exploded view

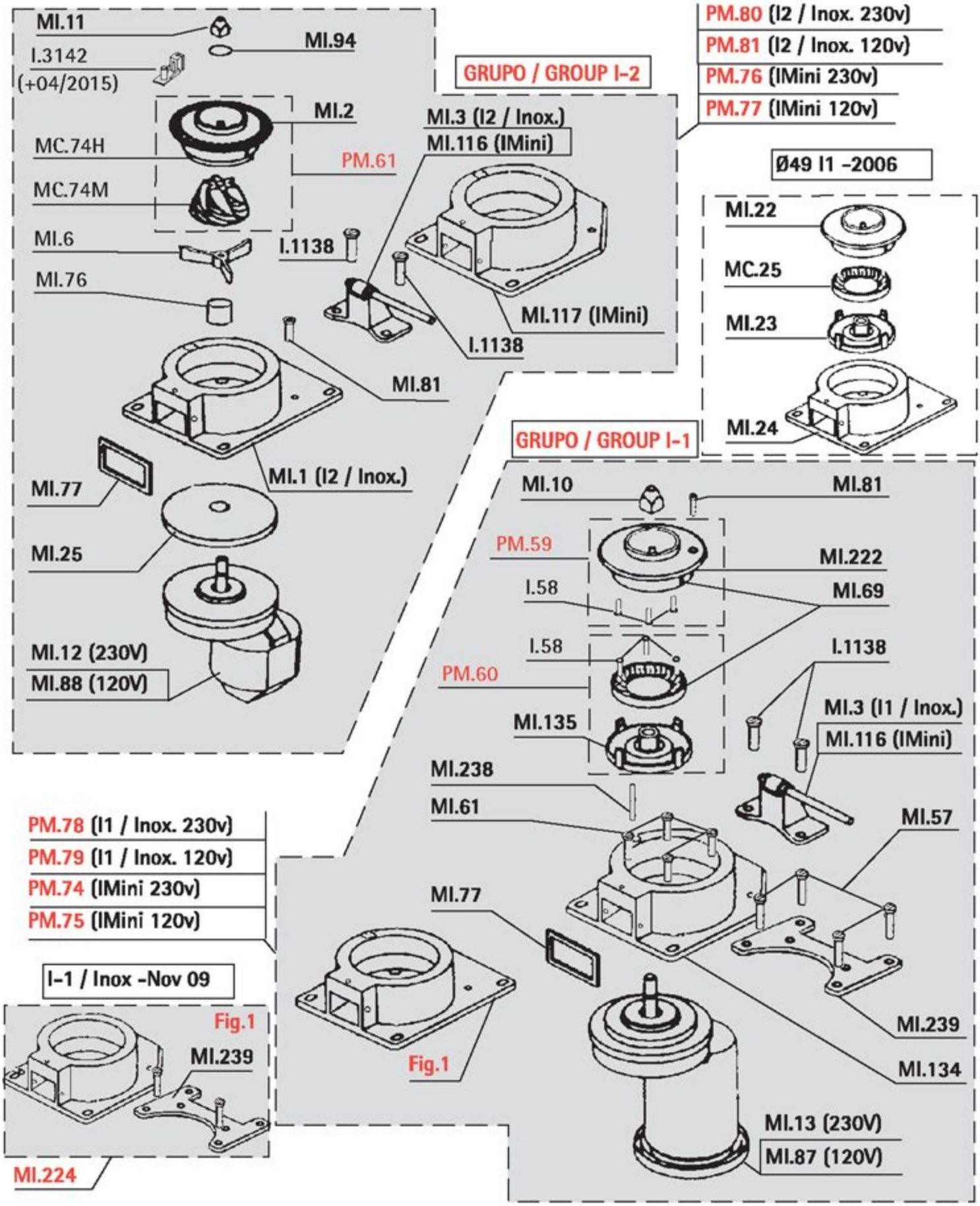

Groups - parts list			
SKU	Description	SKU	Description
I...58	SCREW	MI..61	MOTOR I1 SCREW
I.1138	SCREW DIN 7985 M5X15 INOX	MI..69	54mm BLADES
I.3142	TOP OF REGULATION GROUP GRINDING I2	MI..76	KIT SELF-LUBRICATED
MC..25	BURR Ø 49x30x7,5mm RIGHT (MINI MOKA)	MI..77	GASKET
MC.74H	GO TO MC..74	MI..81	SCREW
MC.74M	GO TO MC..74	MI..87	MOTOR GRINDER I-1/I-1D 110V
MI...1	CALYX	MI..88	110V I2/I2D MOTOR
MI...2	UPPER CUTTINGHOLDER	MI..94	WASHER
MI...3	RIGHT REGULATION SUPPORT	MI.116	ASSEMBLED SUPPORT
MI...6	STAR	MI.117	MINIGRIDER CALYX
MI..10	M8 CONIC NUT	MI.134	I4 MINI GRINDER CALYX
MI..11	M6 CONIC NUT	MI.135	DIAM 54 I4 LOWER CUTTINGHOLDER
MI..12	I-2/I-2D MOTOR	MI.222	54mm UPPER CUTTINGHOLDER
MI..13	I-1/I-1D MOTOR	MI.238	GROUPILLE 3X14
MI..22	GO TO MI-222	MI.239	CALYX ADAPTION PLATE
MI..23	CANCEL	PM..59	BLADE+UPPER I1 HOLDERBLADE
MI..24	GO TO MI-224	PM..60	BLADE+LOWER I1 HOLDERBLADE
MI..25	TOOTHED NYLON ROLLER	PM..61	UPPER HOLDERBLADE + I2 BLADE
MI..57	SCREW	PM..74	IMINI I1 230V MOTOR